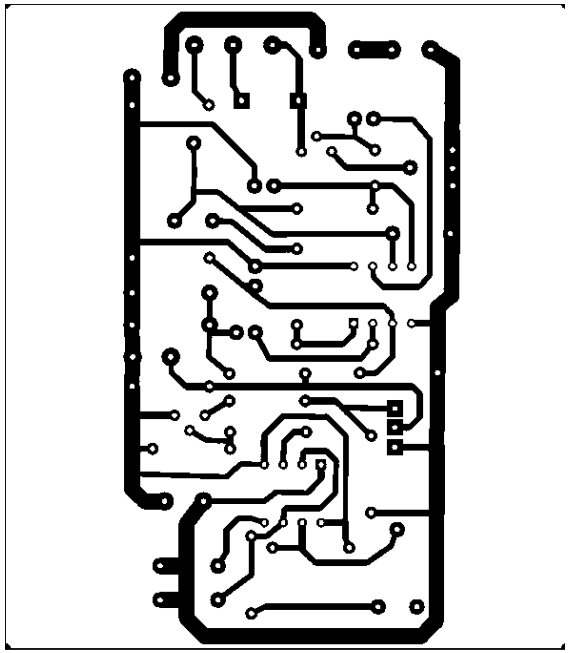

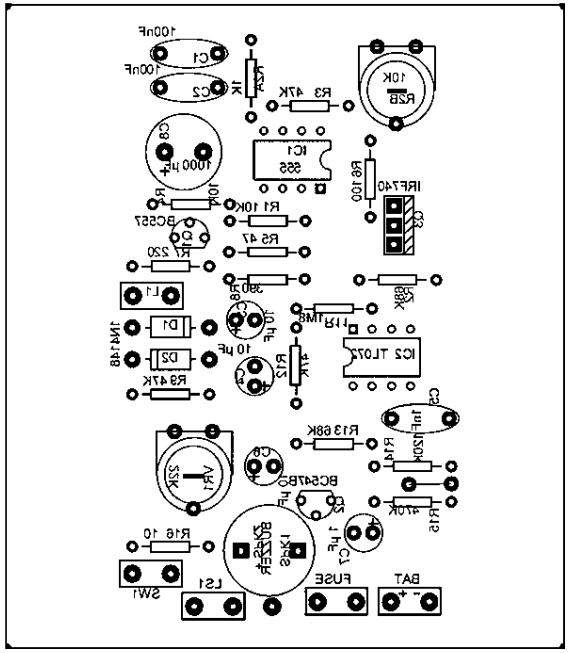
BAT
FUSE
LS1
SW1
R16 10
BUZZER
1KHz
VR1
22K
C6
1 µF
BC547B
R15
470K
C5
1uF/20V
R14
R13 68K
IC2 TL072
R12
470K
C4
10 µF
R11
10 µF
R10
390
R9 47K
D1
1N4148
D2
1N4148
L1
R7 220
Q2
BC557
R6
100
R5 47
R4 10K
IC1
555
C3
1000 µF
R3 47K
R2
1K
C1
100nF
C2
100nF
R8 100
IRF740
Q3
R1 10K